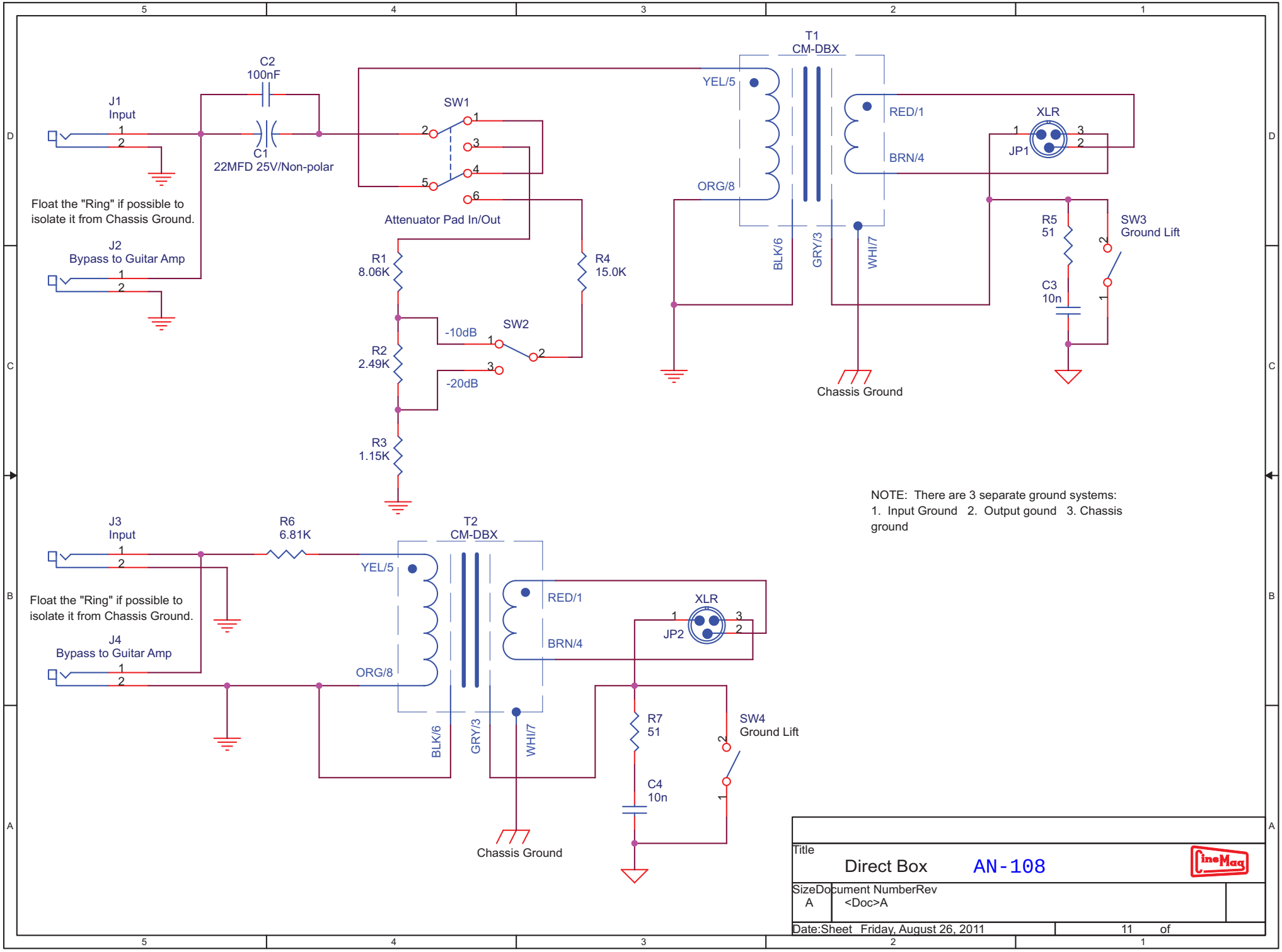
J1
Input
Float the "Ring" if possible to isolate it from Chassis Ground.
J2
Bypass to Guitar Amp
C2
100nF
C1
22MFD 25V/Non-polar
SW1
Attenuator Pad In/Out
R1
8.06K
R2
2.49K
R3
1.15K
R4
15.0K
SW2
-10dB
-20dB
T1
CM-DBX
YEL/5
ORG/8
RED/1
BRN/4
BLK/6
GRY/3
WHI/7
XLR
JP1
R5
51
C3
10n
SW3
Ground Lift
Chassis Ground
NOTE: There are 3 separate ground systems:
1. Input Ground 2. Output gound 3. Chassis ground
J3
Input
Float the "Ring" if possible to isolate it from Chassis Ground.
J4
Bypass to Guitar Amp
R6
6.81K
T2
CM-DBX
YEL/5
ORG/8
RED/1
BRN/4
BLK/6
GRY/3
WHI/7
XLR
JP2
R7
51
C4
10n
SW4
Ground Lift
Chassis Ground
Title
Direct Box
AN-108
LineMag
Size
A
Document Number
<Doc>A
Rev
Date:
Sheet
Friday, August 26, 2011
11
of