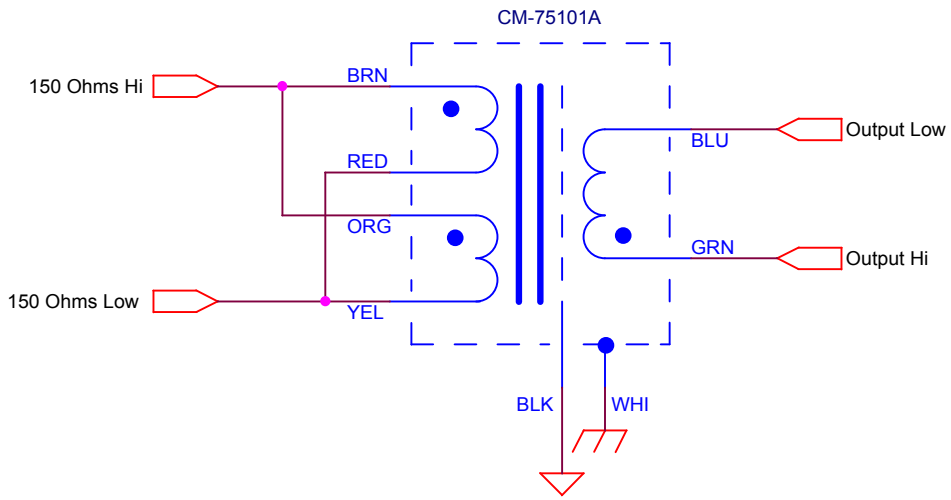
CM-75101A
150 Ohms Hi
150 Ohms Low
BRN
RED
ORG
YEL
BLU
GRN
Output Low
Output Hi
BLK
WHI

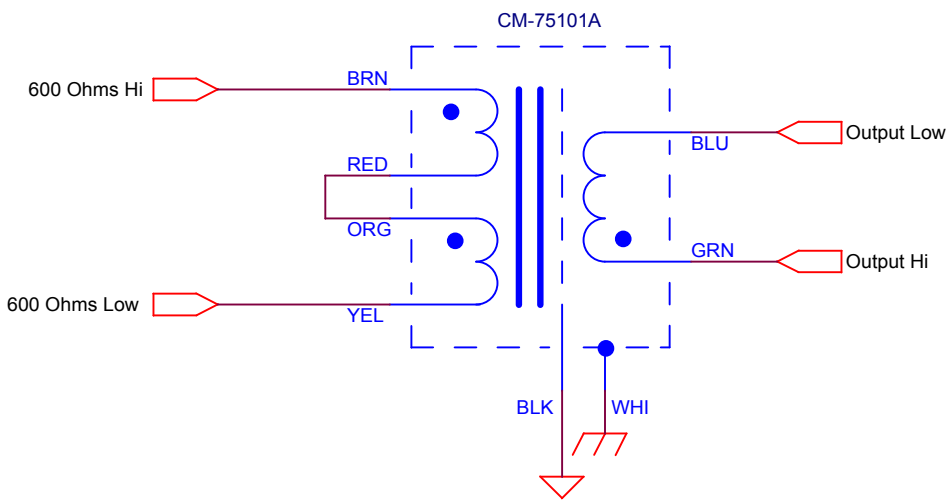
CM-75101A
600 Ohms Hi
600 Ohms Low
BRN
RED
ORG
YEL
BLU
GRN
Output Low
Output Hi
BLK
WHI