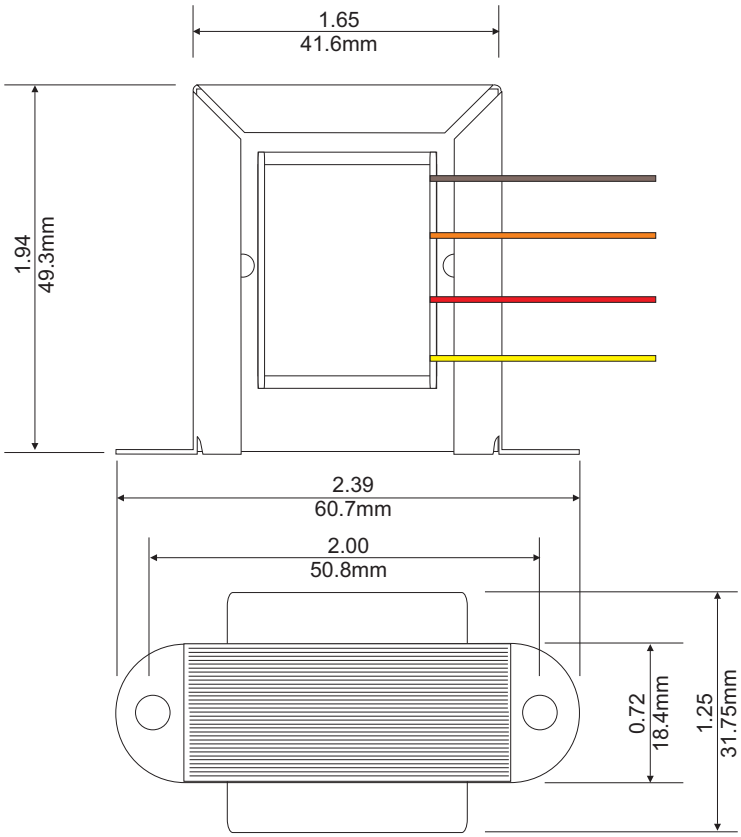

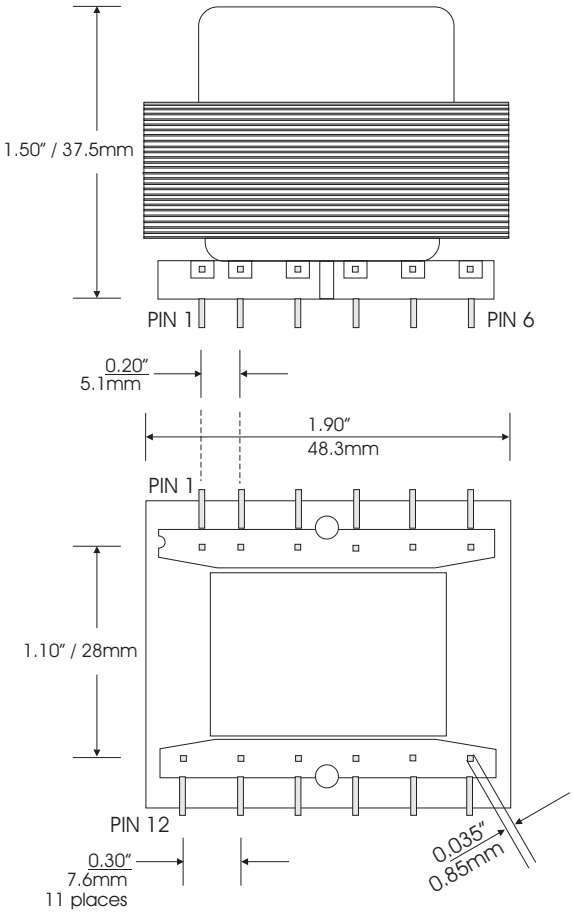

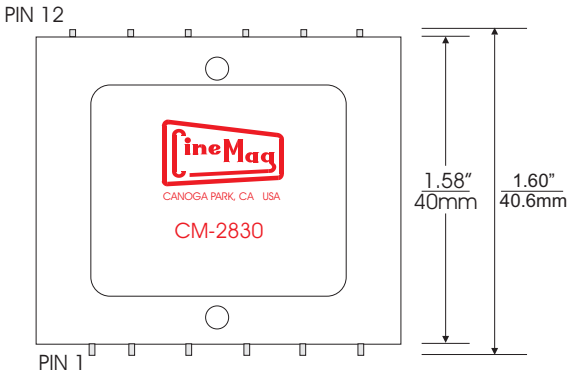

Copyright 2017 Cinemag, Inc. All rights reserved.