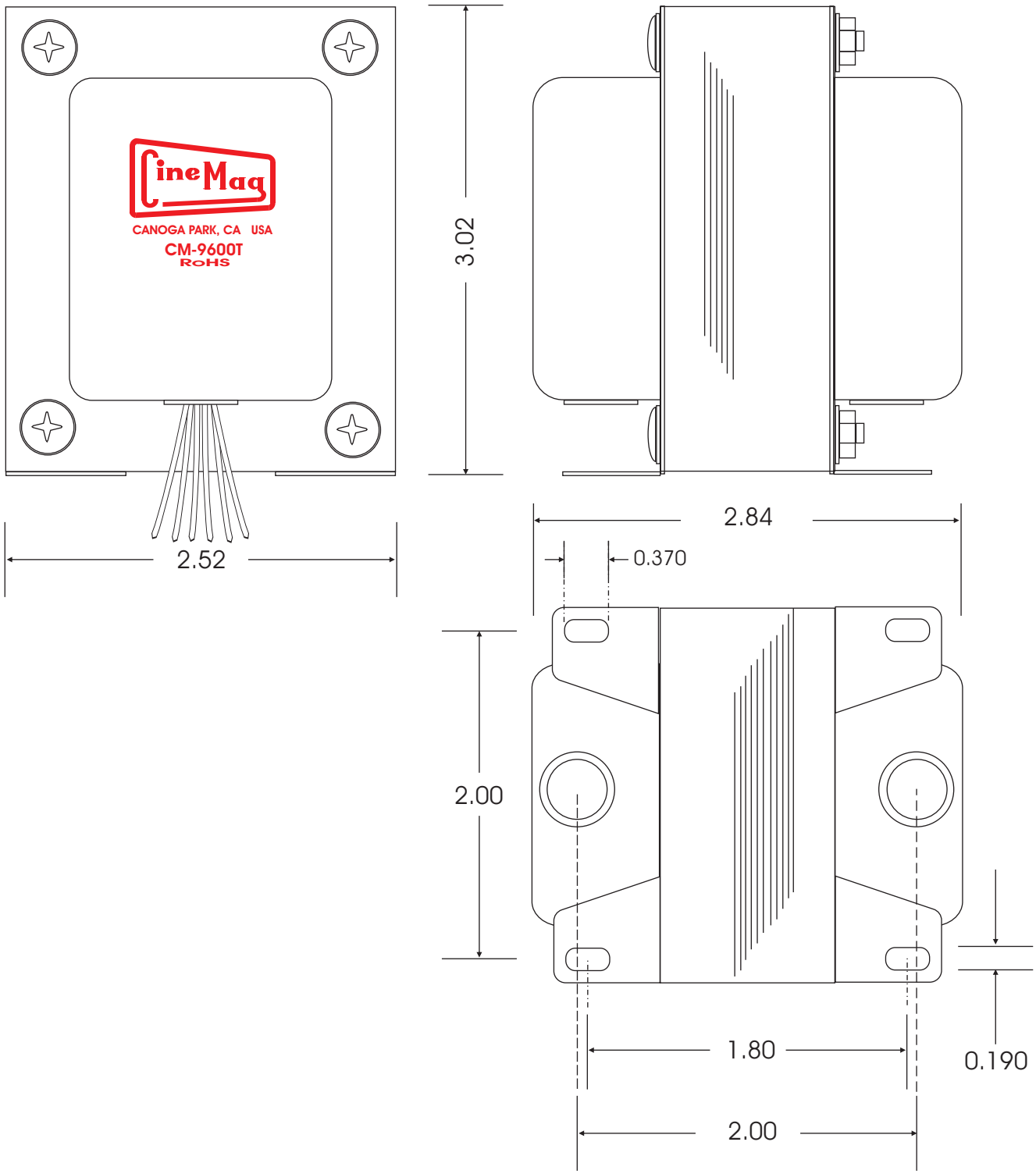
CineMag
CANOGA PARK, CA USA
CM-9600T
RoHS
3.02
2.52
2.84
0.370
2.00
1.80
2.00
0.190