REICHENBACH ENGINEERING

CMOQ-2

LINE OUTPUT TRANSFORMER
Quadfilar Windings

- Excellent bandwidth
- Distortion 0.01% typ at 20 Hz, Rs=150Ω HiNi
- +23 dBm at 20 Hz
- Low insertion loss

The CineMag CMOQ-2 output transformers use multifilar construction techniques for very wide bandwidth. They are available with 80% high-nickel laminations ("H" suffix to the part number; 50% high-nickel + 50% steel ("L"); and steel ("S") suffixes. Insertion loss is low. They are available with lead wires or printed circuit pins, with and without channel frames. It is recommended that the amplifier driving it have an out impedance of less than 600Ω and good damping.

Various lamination properties are available each having its own sonic characteristic, from the "H" (80% high-nickel) version which is minimally colored, to the "S" (steel) at the other end of the spectrum with rich overtones. The "L" version interleaves high-nickel with steel laminations, instead of simply using a 50% alloy. Critical listening tests have proven this to be superior as compared to a 50% alloy. One reason for this is that laminations are heat treated after they are stamped out to relieve stresses in the metal. Steel (iron) and nickel heat treat very differently. CineMag's proprietary annealing processes maximize acoustic performance.

CMOQ-2H (High nickel laminations) **CMOQ-2L** (50% hi-nickel interleaved with 50% steel) **CMOQ-2S** (Steel laminations)

Parameter	Conditions	Typical
Turns Ratio		1 : 1.00
Input Impedance (Zi)	20 Hz to 20 kHz, 0 dBu Test Circuit 4	680 Ω
Voltage Gain	1 kHz HiNi Core, Rs=150 Test Circuit 1 1 kHz 50% Nickel/50% Steel Core, Rs=150	-2.75 dB -2.78 dB
Distortion (THD+N%)	1 kHz, +4 dBu, Rs=150 HiNi Test Circuit 1 1 kHz, +4 dBu, Rs=150 50%Ni/50% Steel	0.0004% 0.0006%
Max 20 Hz input level	1.0% THD+N, Rs≤150 HiNi Test Circuit 1 1.0% THD+N, Rs≤150 50% Ni 50% Steel	+22 dBm +22 dBm
Response, ref 1 kHz	20Hz Rs=150Ω HiNi Test Circuit 1 20kHz 200kHz	-0.02dBu -0.02dBu -1.4dBu
Phase Shift at 20Hz Phase Shift at 20 kHz	Referenced to source generator Test Circuit 1	+1° -5°
CMRR	60 Hz Test Circuit 2 per IEEE Std 389- ¶19 1 kHz Test Circuit 2 per IEEE Std 389- ¶19	88 dB 92 dB
Output CMRR	60 Hz Test Circuit 3 1 kHz Test Circuit 3	92 dB 98 dB
Operating Temp Range		0°C - 70°C Max

4487 Ish Drive, Simi Valley, CA 93063 (818) 993-4644 http://www.cinemag.biz

Copy right CineMag Inc. All rights reserved.

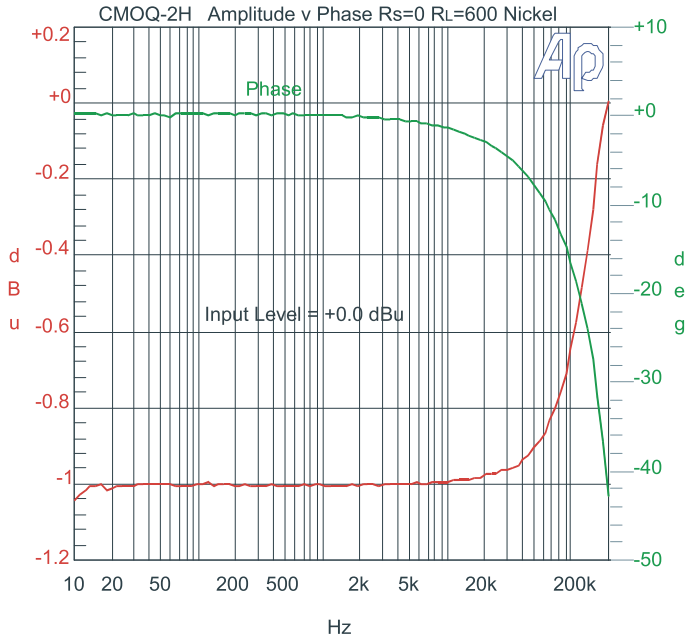
CMOQ-2H Amplitude v Phase Rs=0 RL=600 Nickel
Phase
Input Level = +0.0 dBu
dBu
deg
Hz

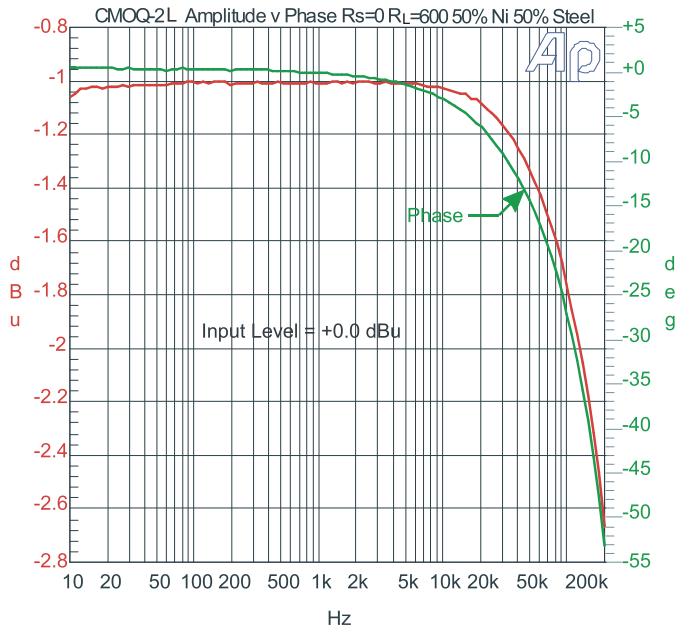
CMOQ-2L Amplitude v Phase Rs=0 RL=600 50% Ni 50% Steel
Phase
Input Level = +0.0 dBu
dBu
deg
Hz

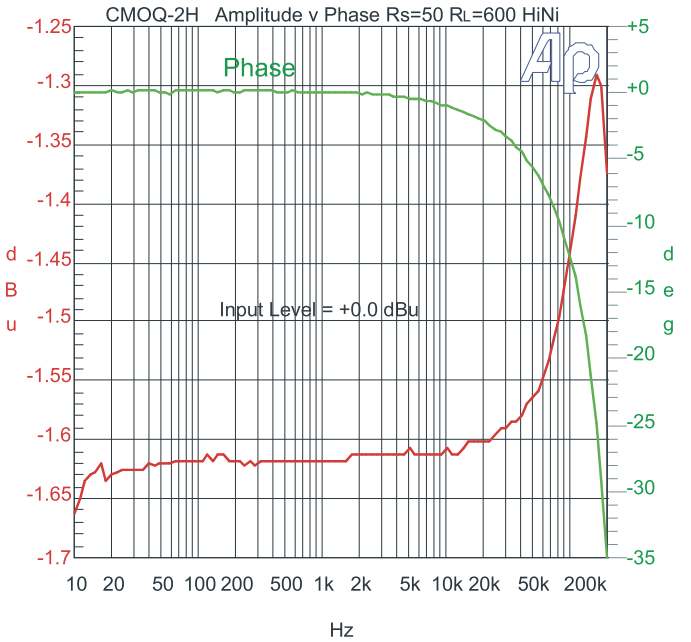
CMOQ-2H Amplitude v Phase Rs=50 RL=600 HiNi
Phase
Input Level = +0.0 dBu
dBu
deg
Hz

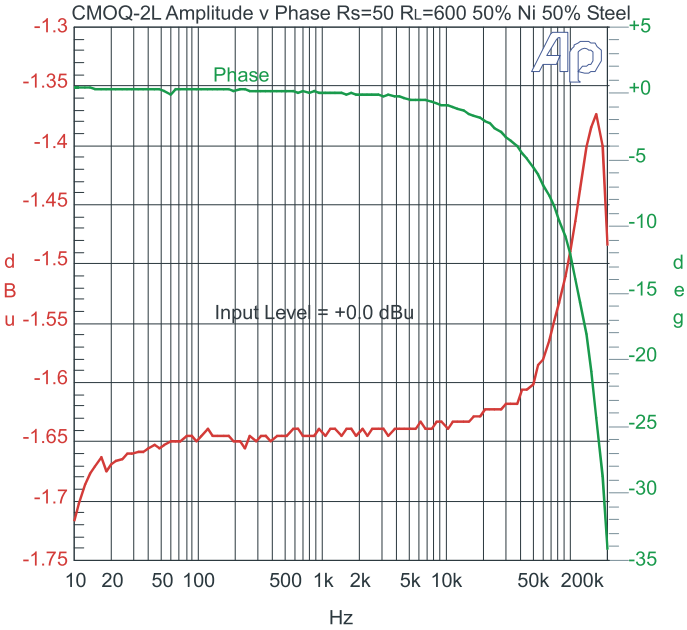
CMOQ-2L Amplitude v Phase Rs=50 RL=600 50% Ni 50% Steel
Phase
Input Level = +0.0 dBu
dBu
deg
Hz

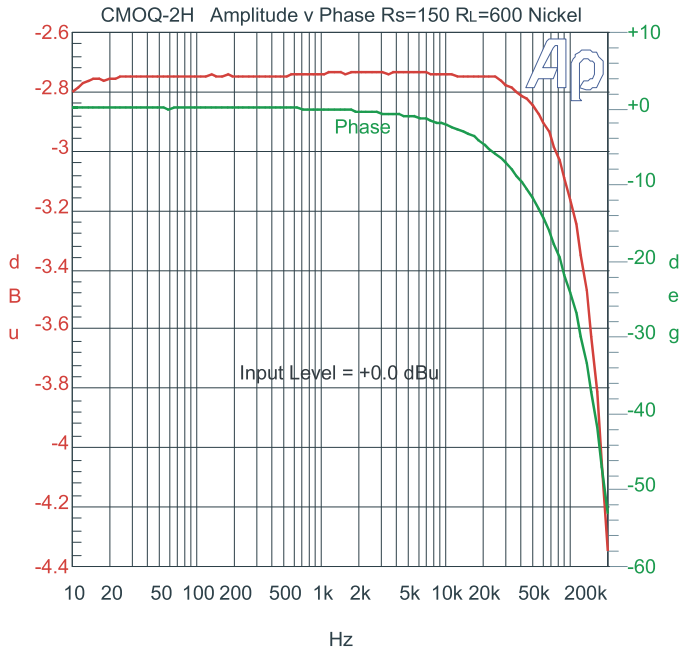
CMOQ-2H Amplitude v Phase Rs=150 RL=600 Nickel
Phase
Input Level = +0.0 dBu
dBu
deg
Hz

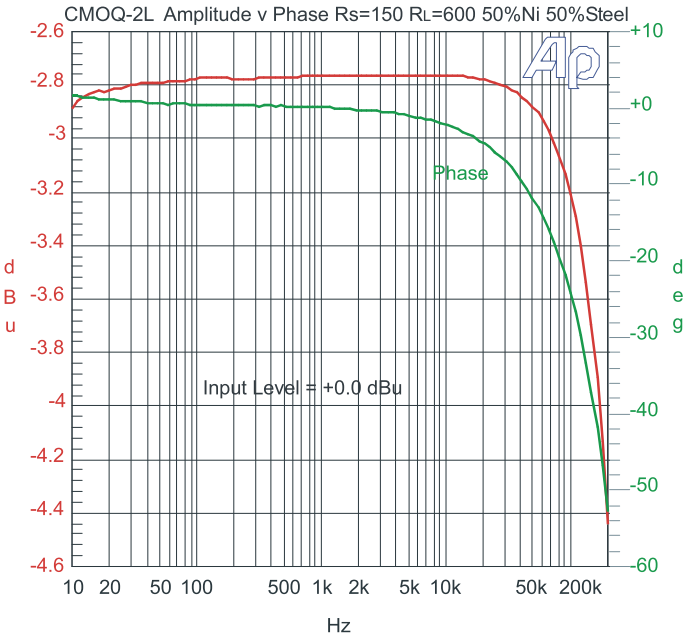
CMOQ-2L Amplitude v Phase Rs=150 RL=600 50%Ni 50%Steel
Phase
Input Level = +0.0 dBu
dBu
deg
Hz

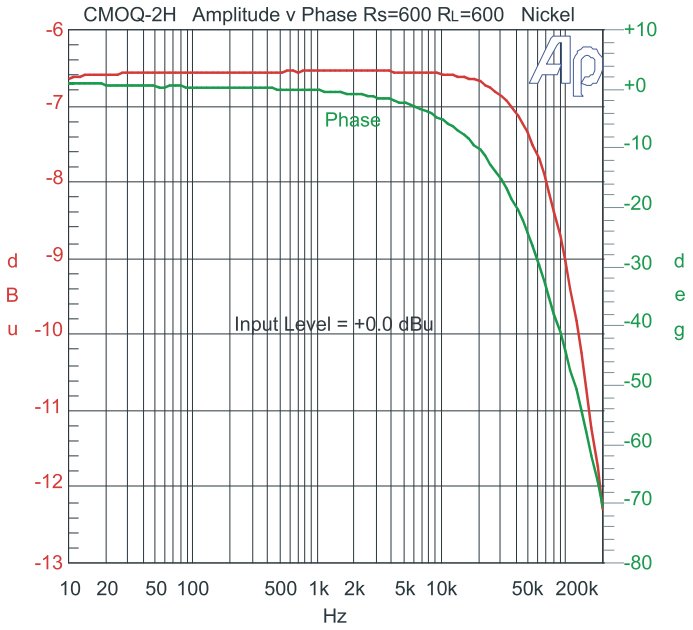
CMOQ-2H Amplitude v Phase Rs=600 RL=600 Nickel
Phase
Input Level = +0.0 dBu
dBu
deg
Hz

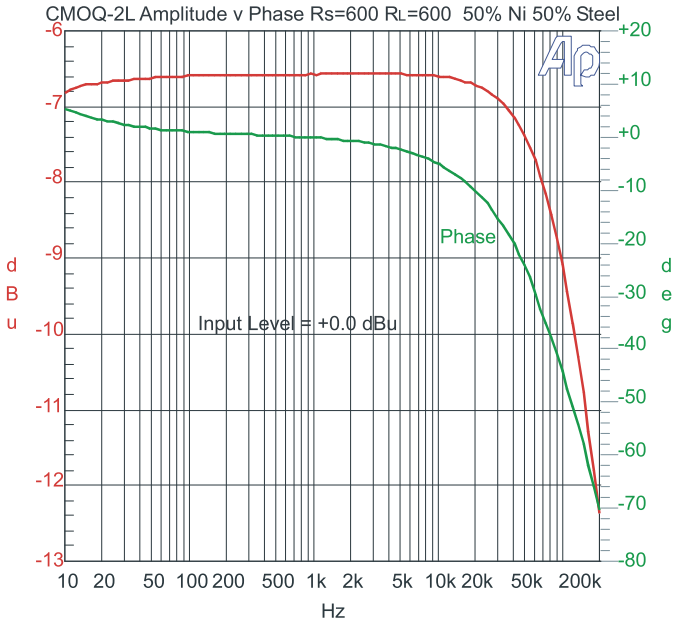
CMOQ-2L Amplitude v Phase Rs=600 RL=600 50% Ni 50% Steel
Phase
Input Level = +0.0 dBu
dBu
deg
Hz

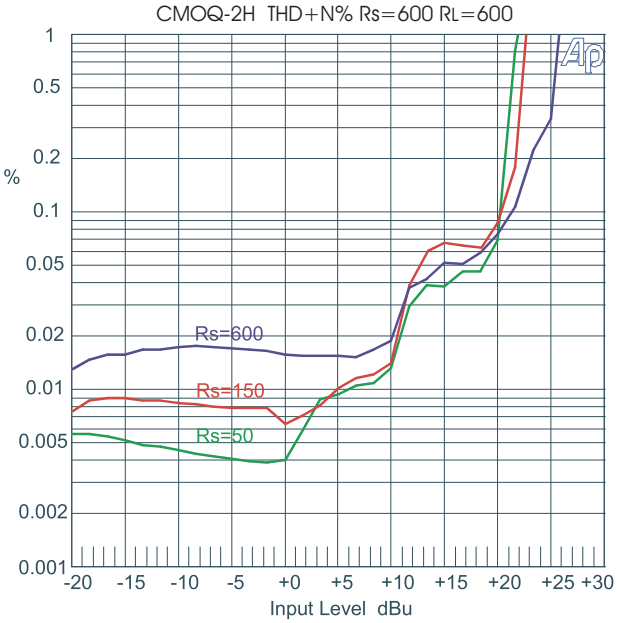
CMOQ-2H THD+N% Rs=600 RL=600
Rs=600
Rs=150
Rs=50
%
Input Level dBu

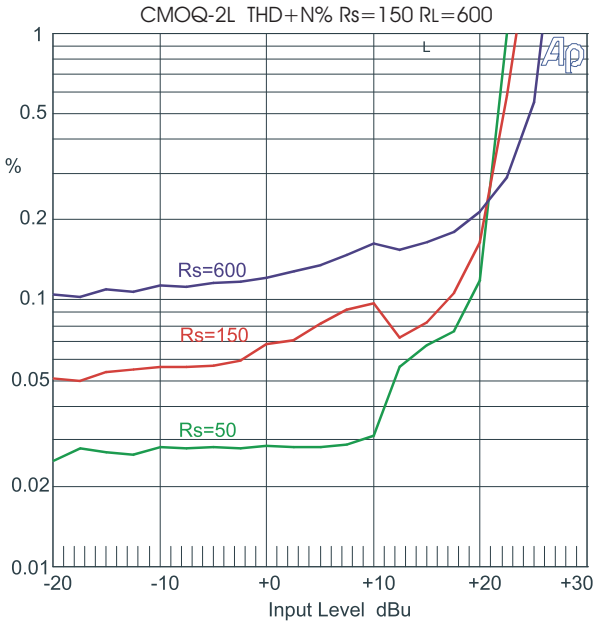
CMOQ-2L THD+N% Rs=150 RL=600
Rs=600
Rs=150
Rs=50
%
Input Level dBu

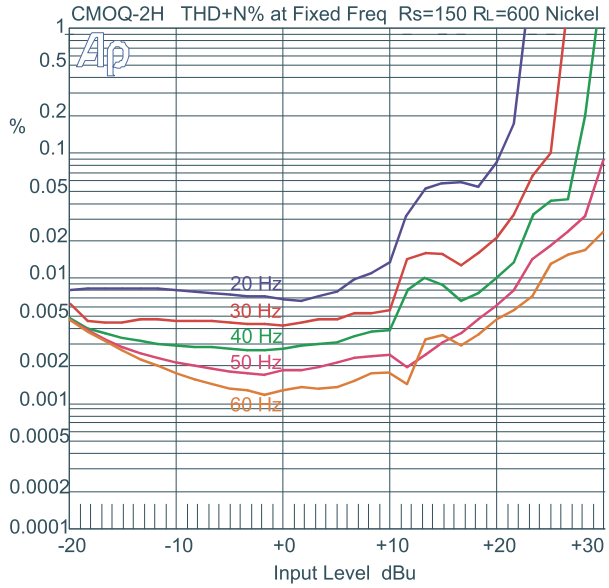
CMOQ-2H THD+N% at Fixed Freq Rs=150 RL=600 Nickel
20 Hz
30 Hz
40 Hz
50 Hz
60 Hz
%
Input Level dBu

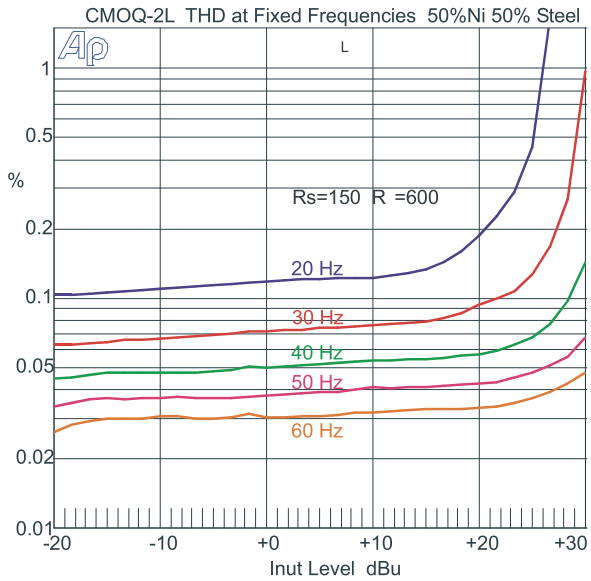
CMOQ-2L THD at Fixed Frequencies 50%Ni 50% Steel
Rs=150 R =600
20 Hz
30 Hz
40 Hz
50 Hz
60 Hz
%
Inut Level dBu

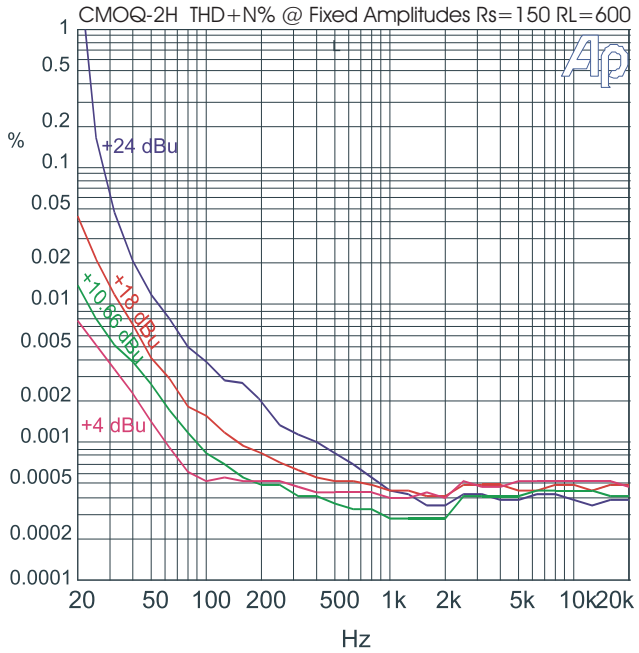
CMOQ-2H THD+N% @ Fixed Amplitudes Rs=150 RL=600
%
+24 dBu
+18 dBu
+10.66 dBu
+4 dBu
Hz

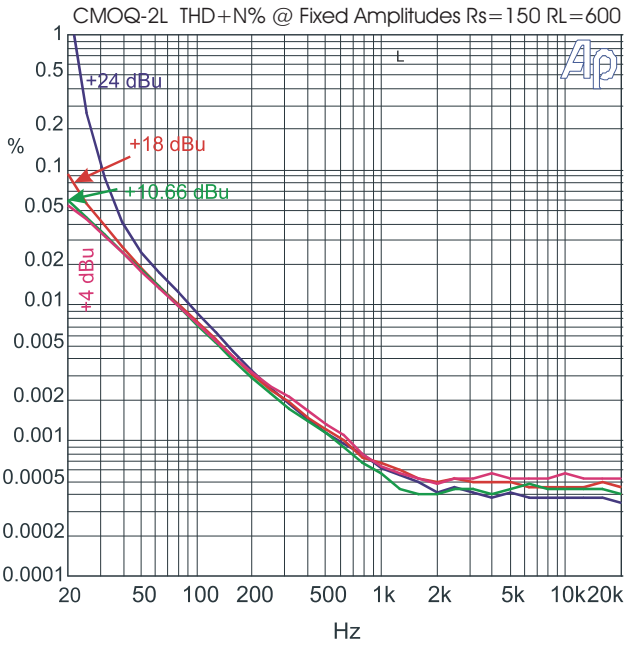
CMOQ-2L THD+N% @ Fixed Amplitudes Rs=150 RL=600
%
+24 dBu
+18 dBu
+10.66 dBu
+4 dBu
Hz

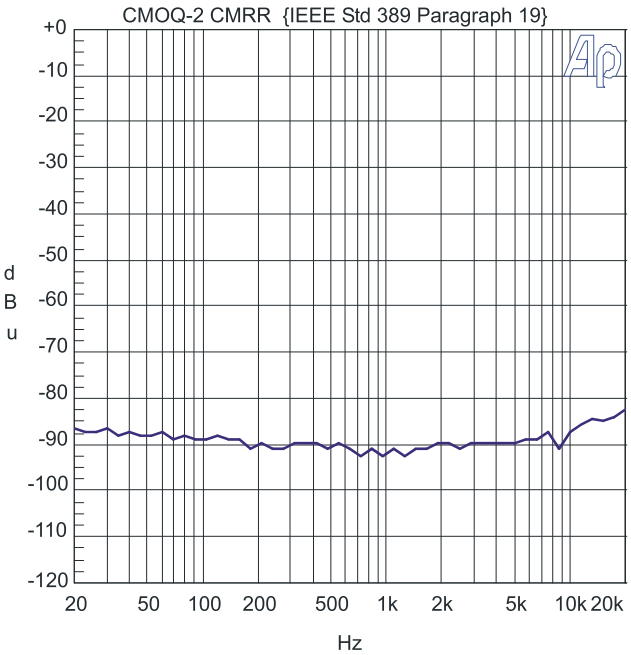
CMOQ-2 CMRR {IEEE Std 389 Paragraph 19}
dBu
Hz

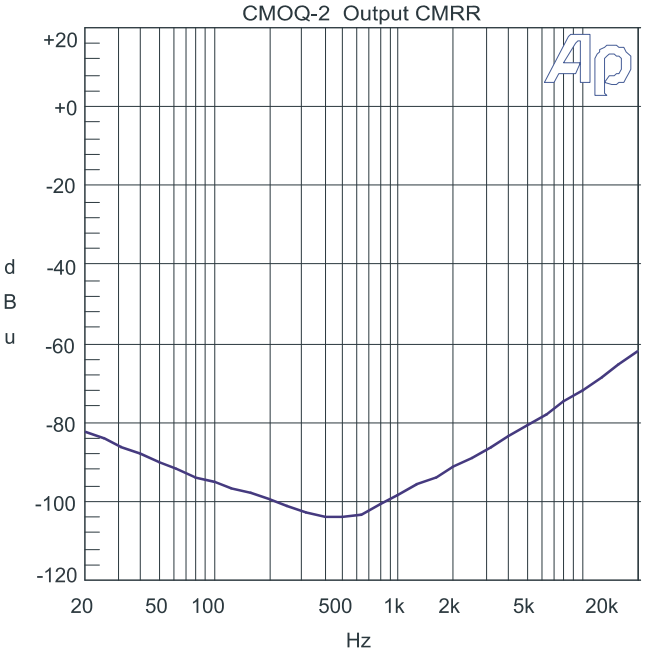
CMOQ-2 Output CMRR
dBu
Hz

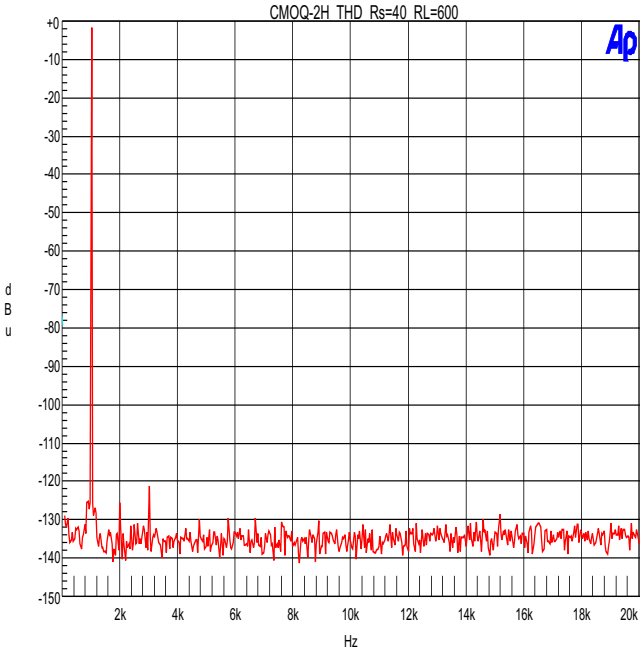
CMOQ-2H THD Rs=40 RL=600
dBu
Hz

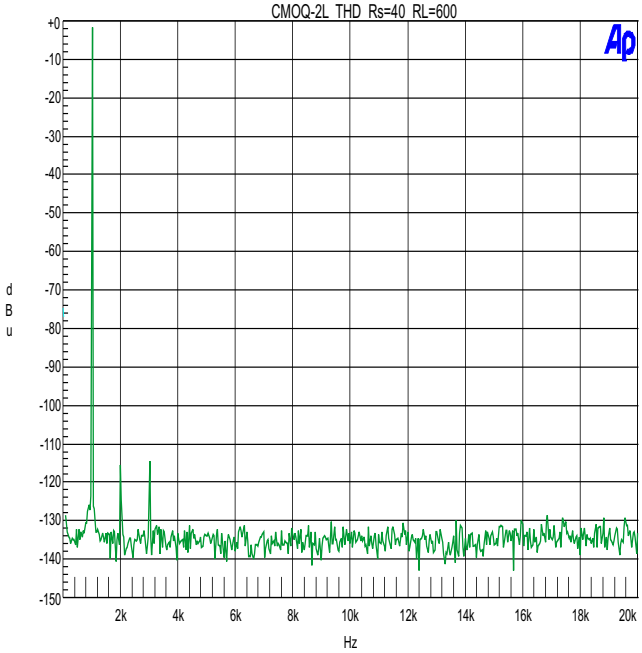
CMOQ-2L THD Rs=40 RL=600
dBu
Hz

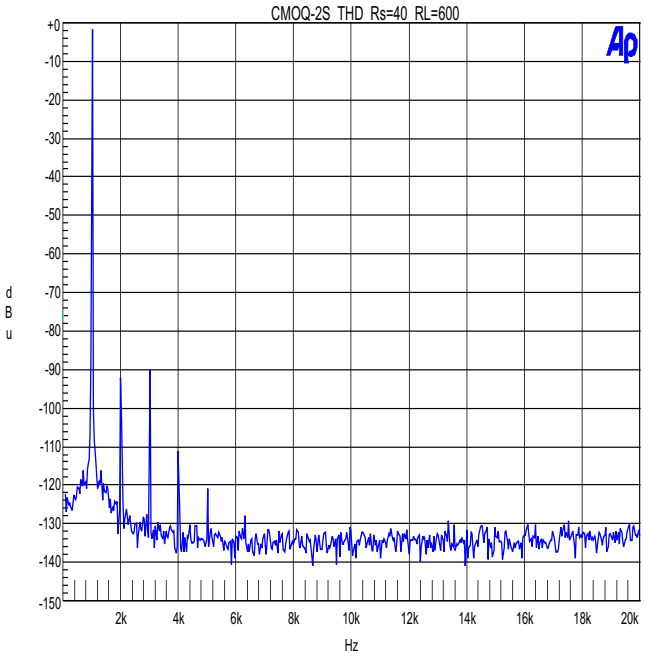

Notes:

1. All graphs generated from one (1) randomly chosen device. No statistical averaging or weighting. Data from one sweep.

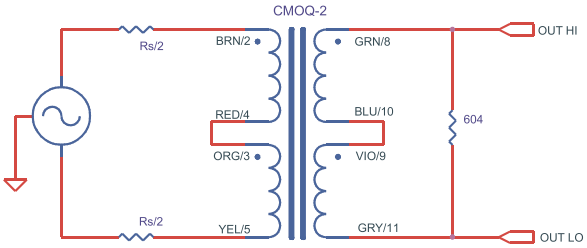

TEST CIRCUIT 1

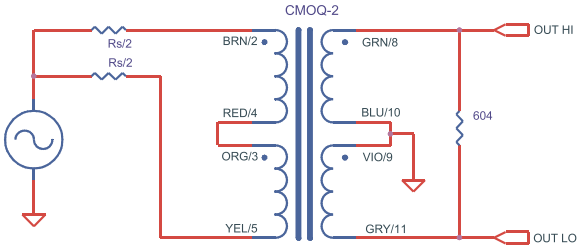

TEST CIRCUIT 2

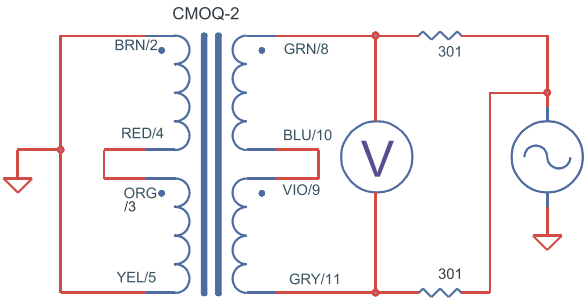

TEST CIRCUIT 3

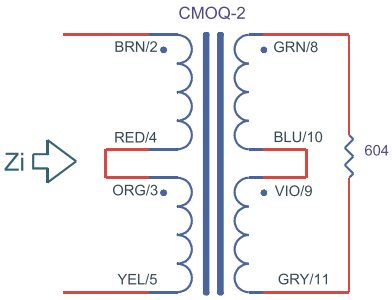

TEST CIRCUIT 4

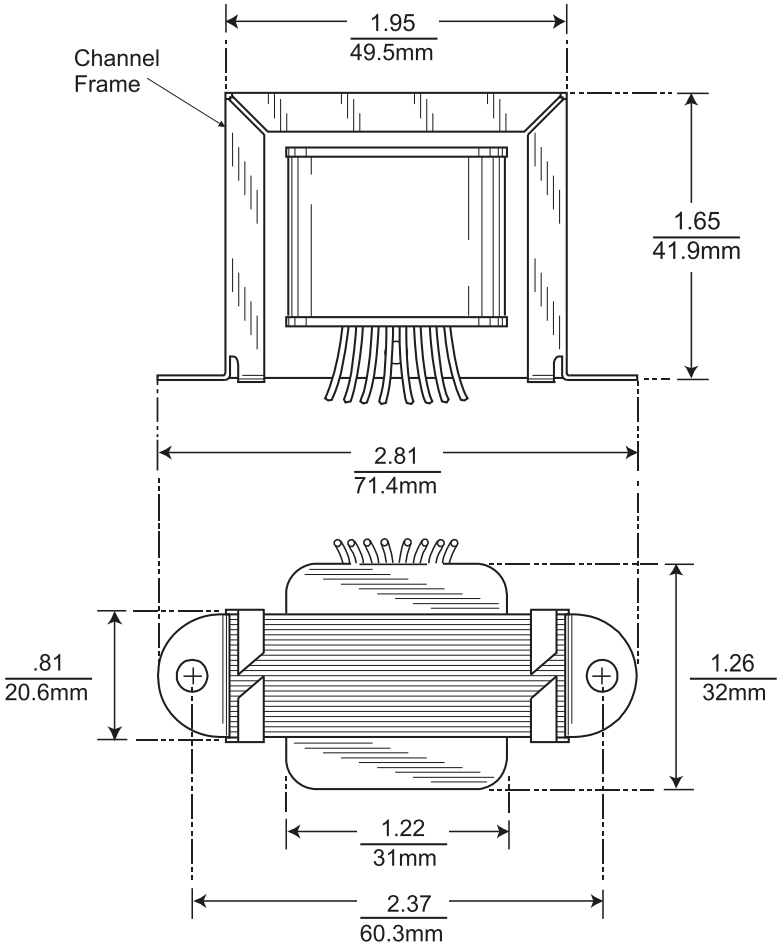
1.95
49.5mm
Channel
Frame
1.65
41.9mm
2.81
71.4mm
.81
20.6mm
1.26
32mm
1.22
31mm
2.37
60.3mm

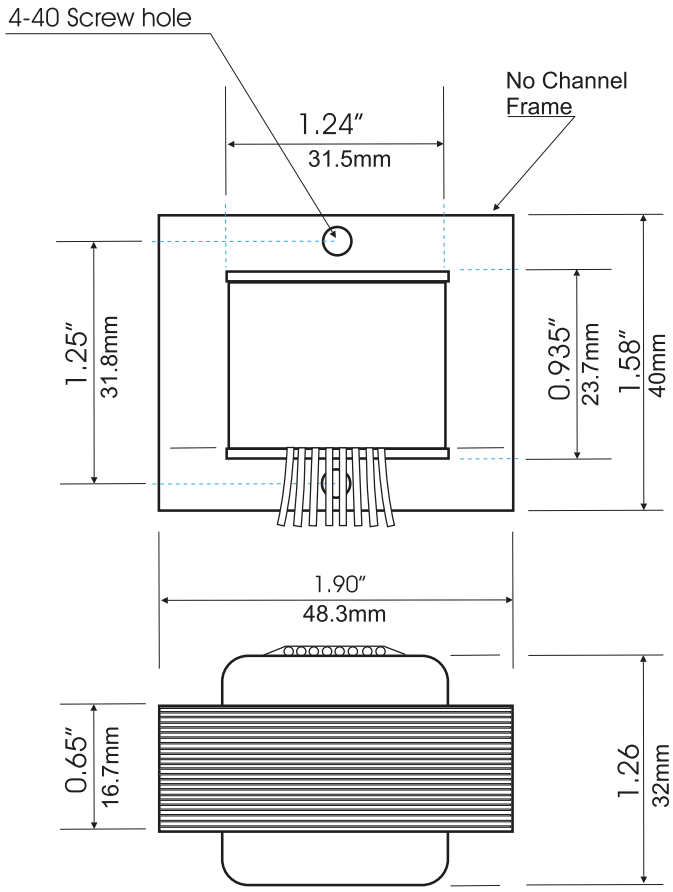
4-40 Screw hole
No Channel
Frame
1.24"
31.5mm
1.25"
31.8mm
0.935"
23.7mm
1.58"
40mm
1.90"
48.3mm
0.65"
16.7mm
1.26
32mm

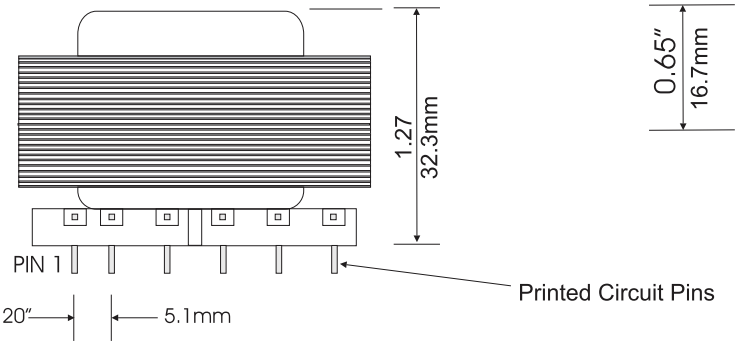
1.27
32.3mm
PIN 1
Printed Circuit Pins
0.20"
5.1mm

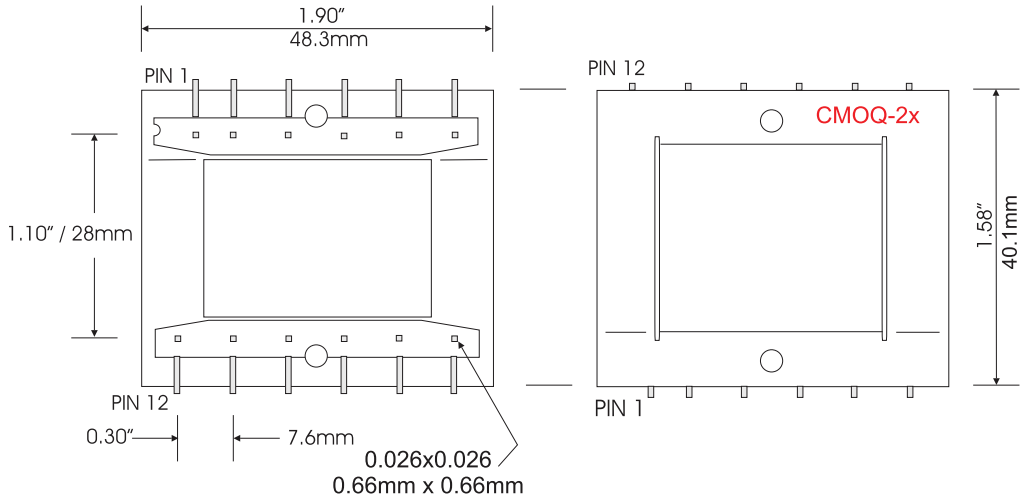
1.90"
48.3mm
PIN 1
PIN 12
1.10" / 28mm
PIN 12
0.30"
7.6mm
0.026x0.026
0.66mm x 0.66mm
CMOQ-2x
1.58"
40.1mm
PIN 1

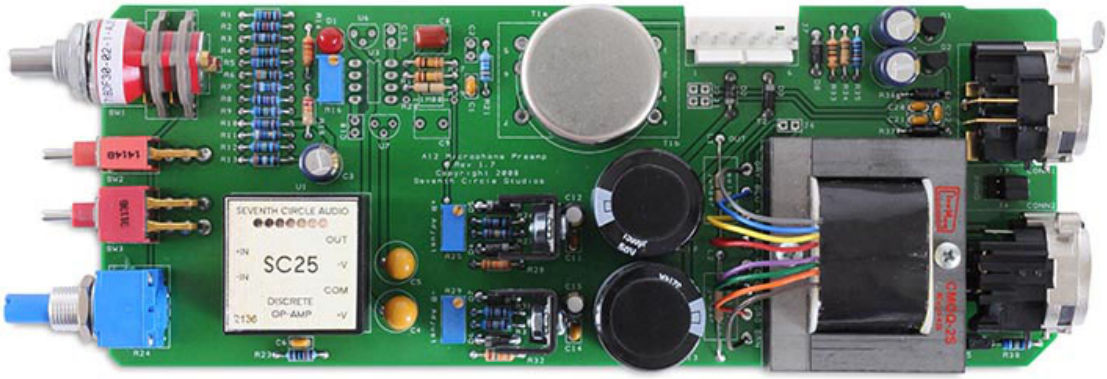

CMOQ-2S No Channel Frame
Mounting Example