CML-14811
650mH

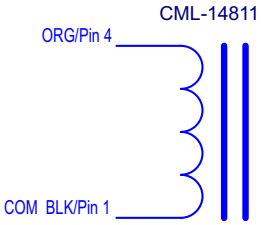

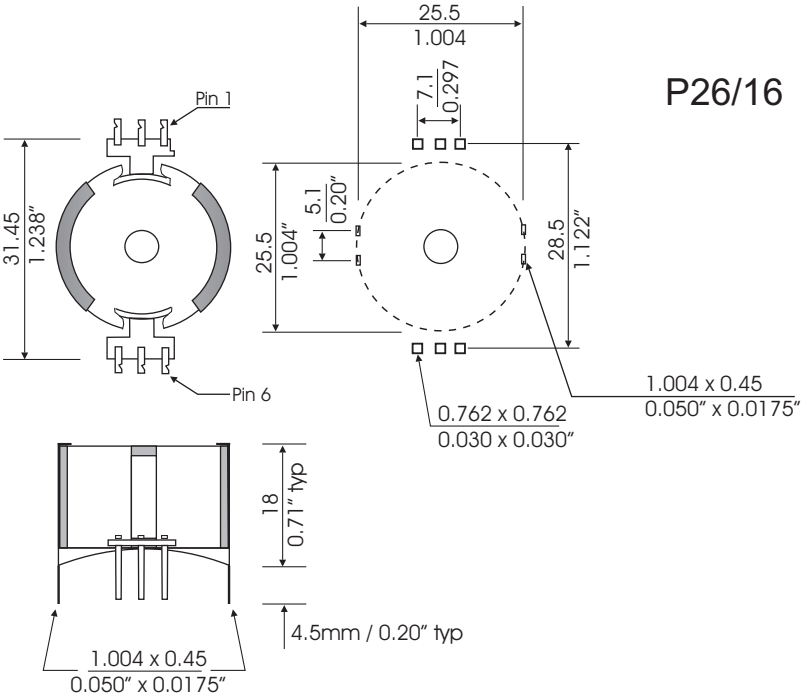

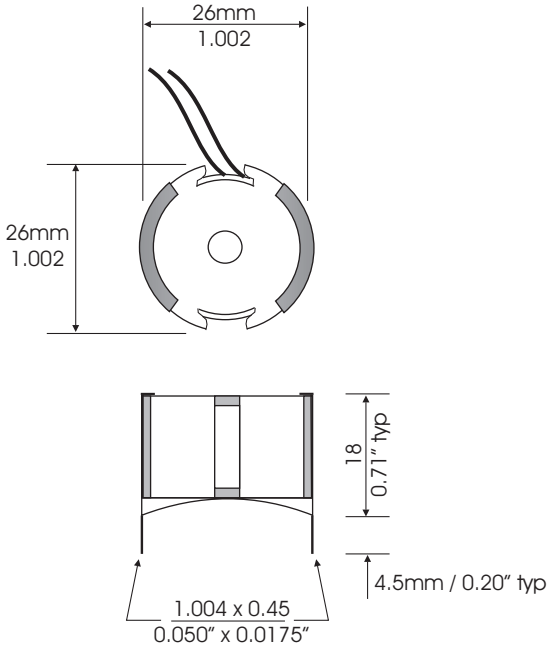

CineMag
4487 Ish Drive, Simi Valley, CA 93063
(818) 993-4644