CML-2450
630mH

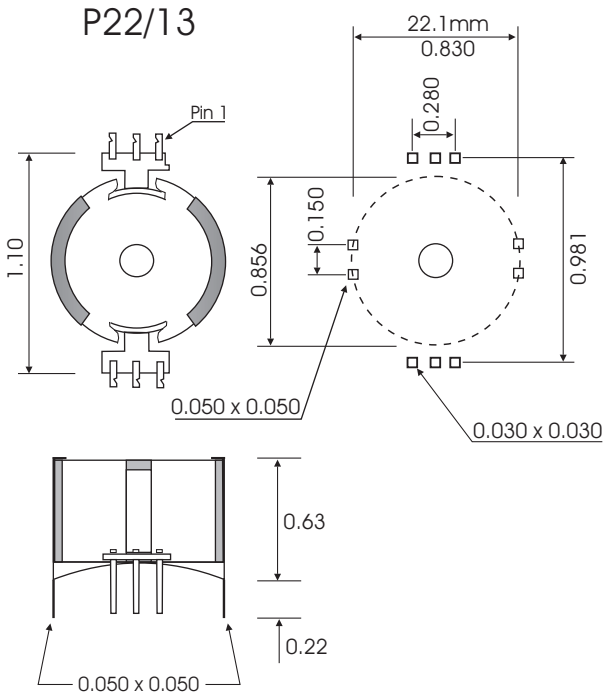

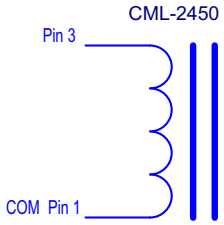

4487 Ish Drive, Simi Valley, CA 93063
(818) 993-4644