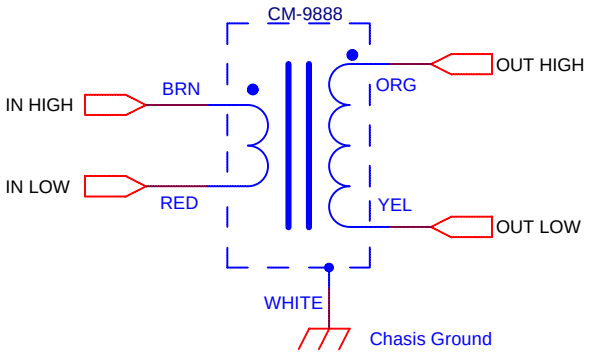
CM-9888
IN HIGH
BRN
IN LOW
RED
ORG
YEL
OUT HIGH
OUT LOW
WHITE
Chasis Ground

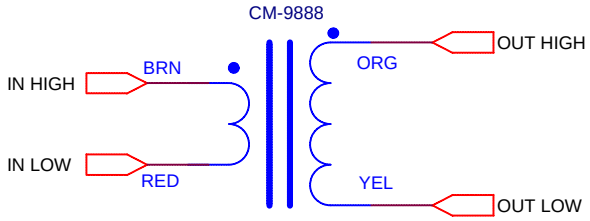
CM-9888
IN HIGH
BRN
IN LOW
RED
ORG
YEL
OUT HIGH
OUT LOW