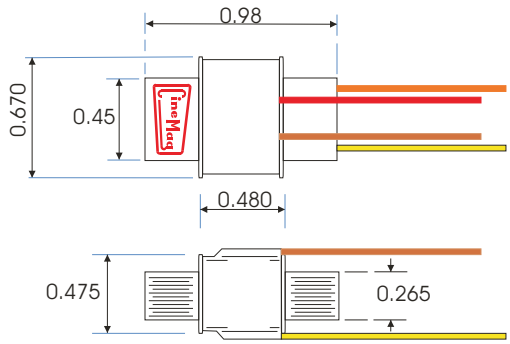
0.98
0.670
0.45
0.480
0.475
0.265

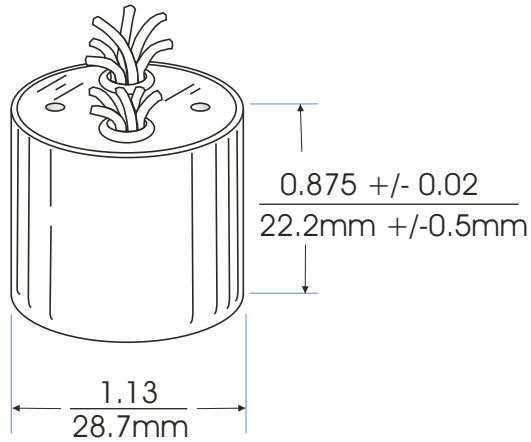
0.875 +/- 0.02
22.2mm +/-0.5mm
1.13
28.7mm

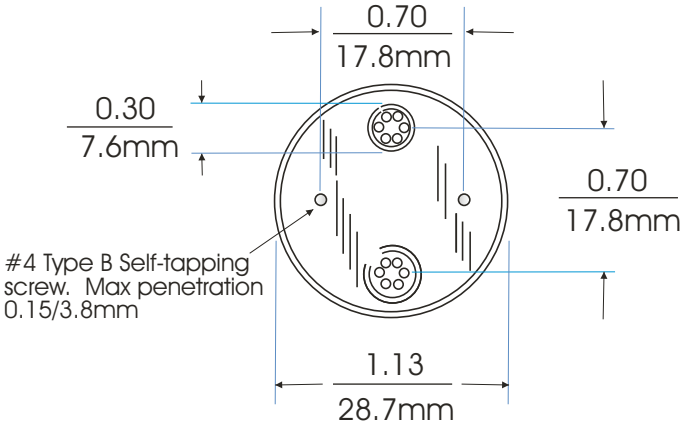
0.70
17.8mm
0.30
7.6mm
0.70
17.8mm
#4 Type B Self-tapping screw. Max penetration 0.15/3.8mm
1.13
28.7mm